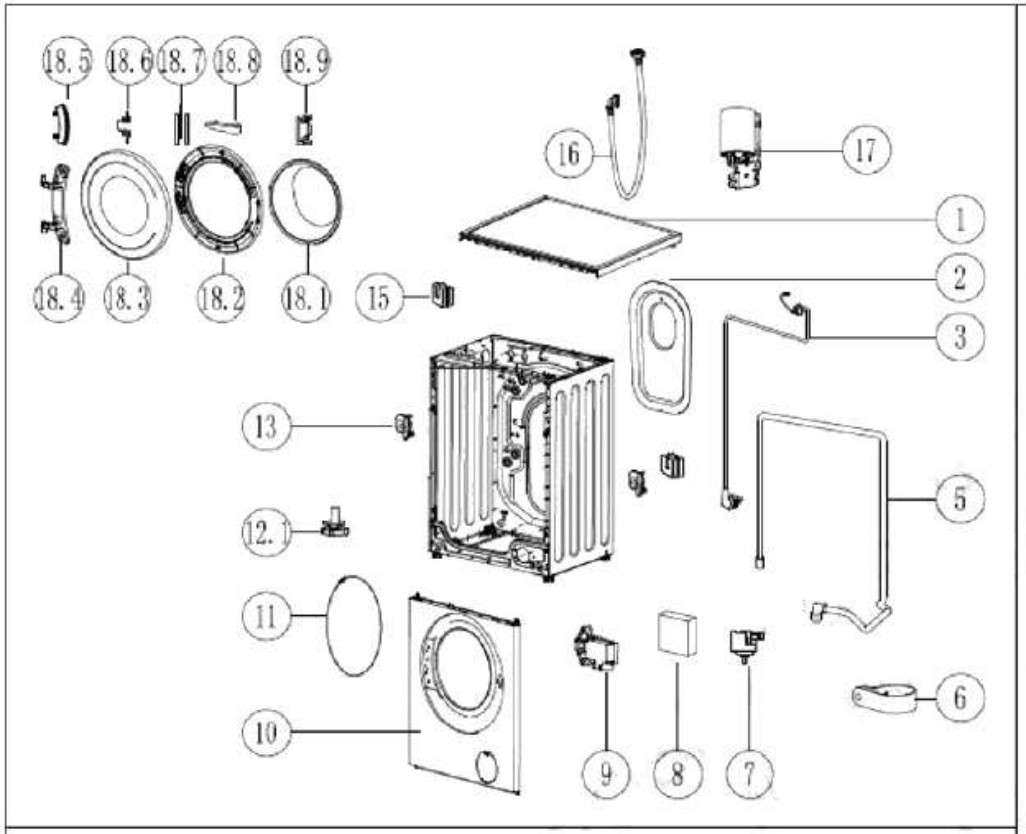
18.5
18.6
18.7
18.8
18.9
18.4
18.3
18.2
18.1
15
16
17
1
2
3
13
12.1
5
11
10
9
8
7
6

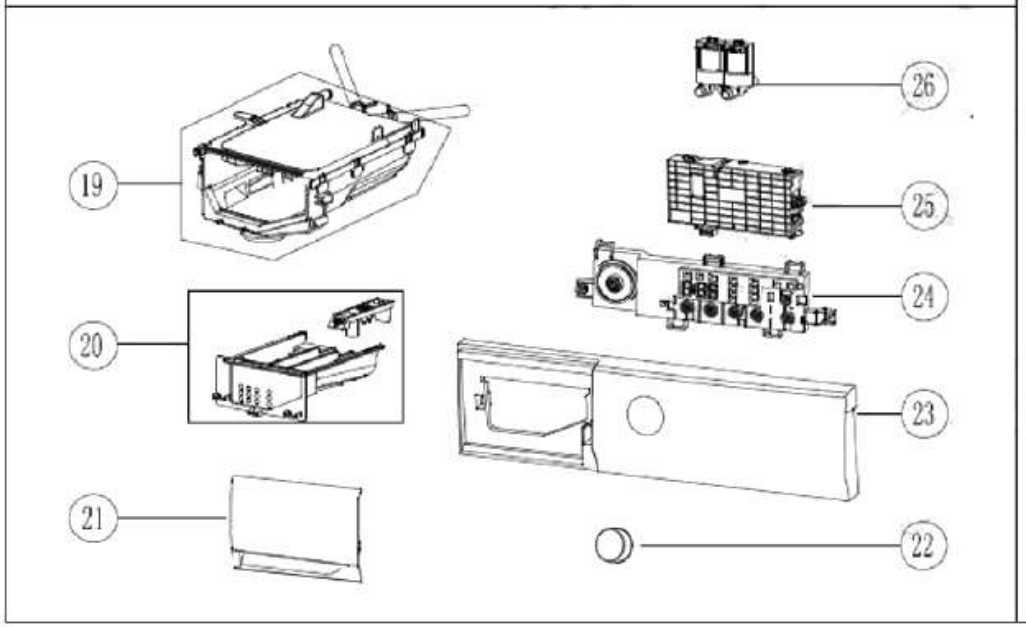
19
20
21
26
25
24
23
22

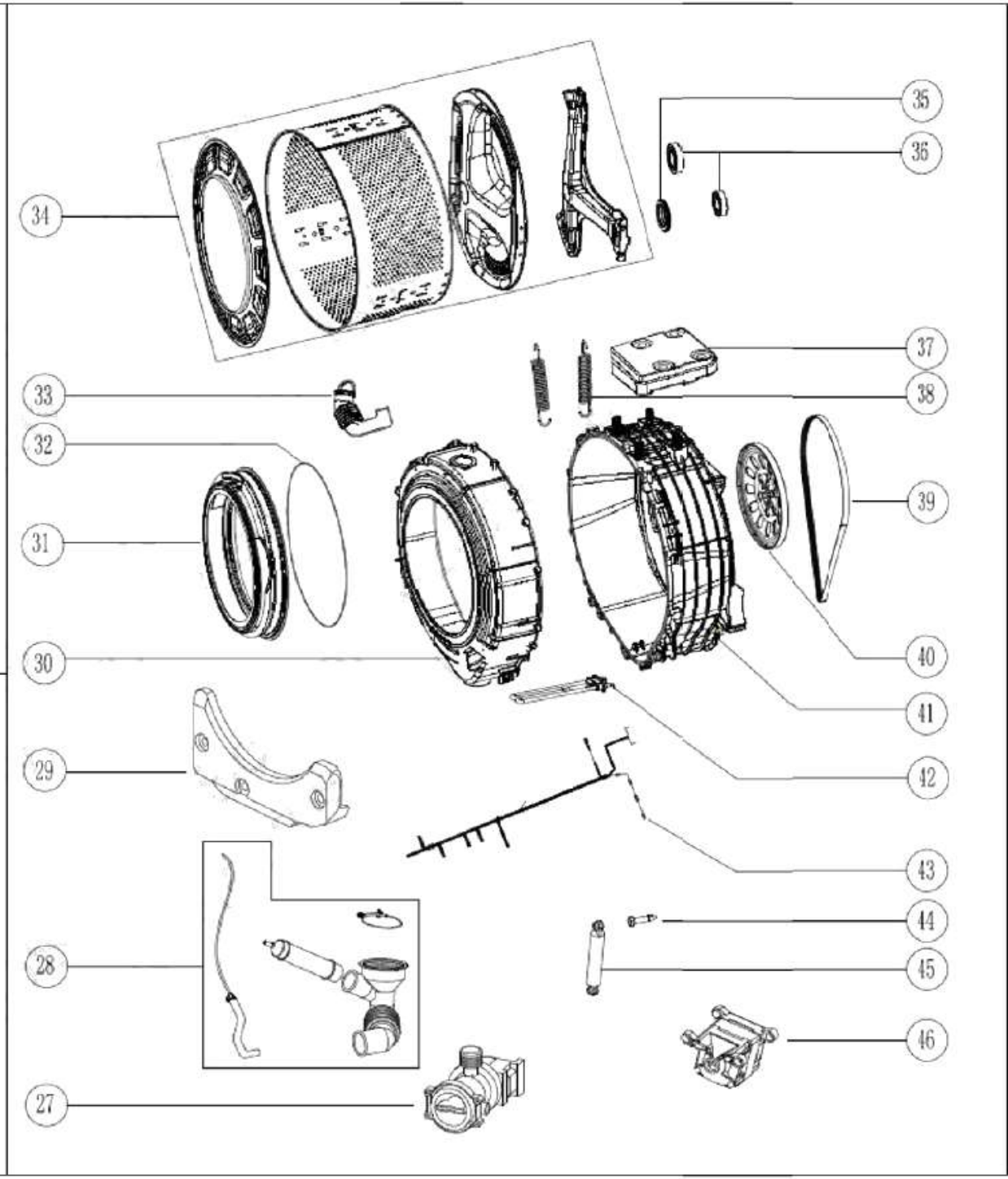
34
35
36
37
38
33
32
31
30
39
40
41
42
29
43
44
45
28
46
27